GROVE.	ACHSANBAU 4 X 4 TELMA RETARDER AXLE ATTACHMENT 4 X 4, TELMA RETARDER	BILDTAFEL PICTORIAL DISPLAY			GMK 2035 BE 511 G 061
		09.02	3056704-ETL B	1/5	

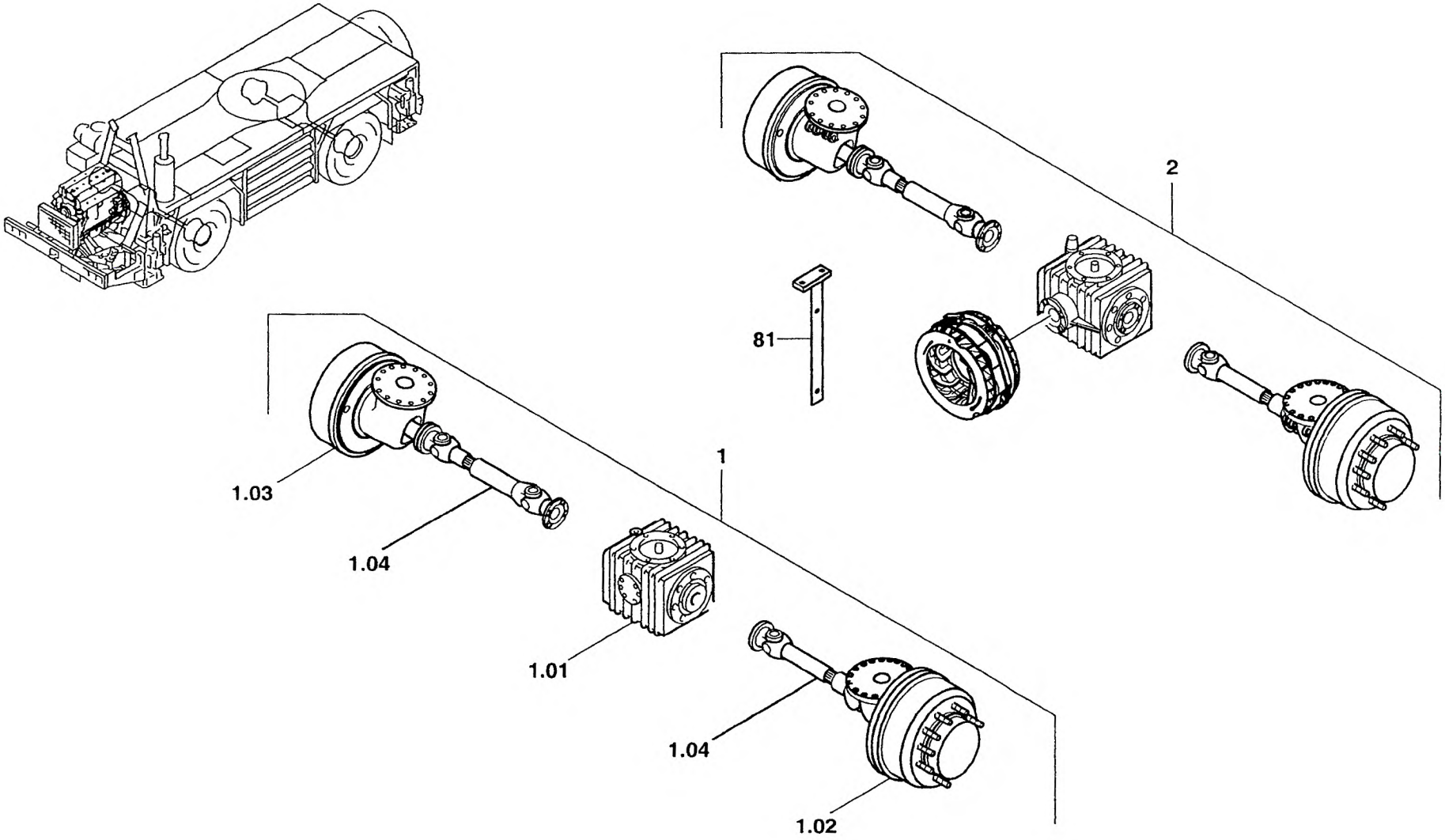

GROVE	ACHSANBAU 4 X 4 TELMA RETARDER AXLE ATTACHMENT 4 X 4, TELMA RETARDER	BILDTAFEL PICTORIAL DISPLAY			GMK 2035 BE 511 G 061
		09.02	3056704-ETL B	2/5	

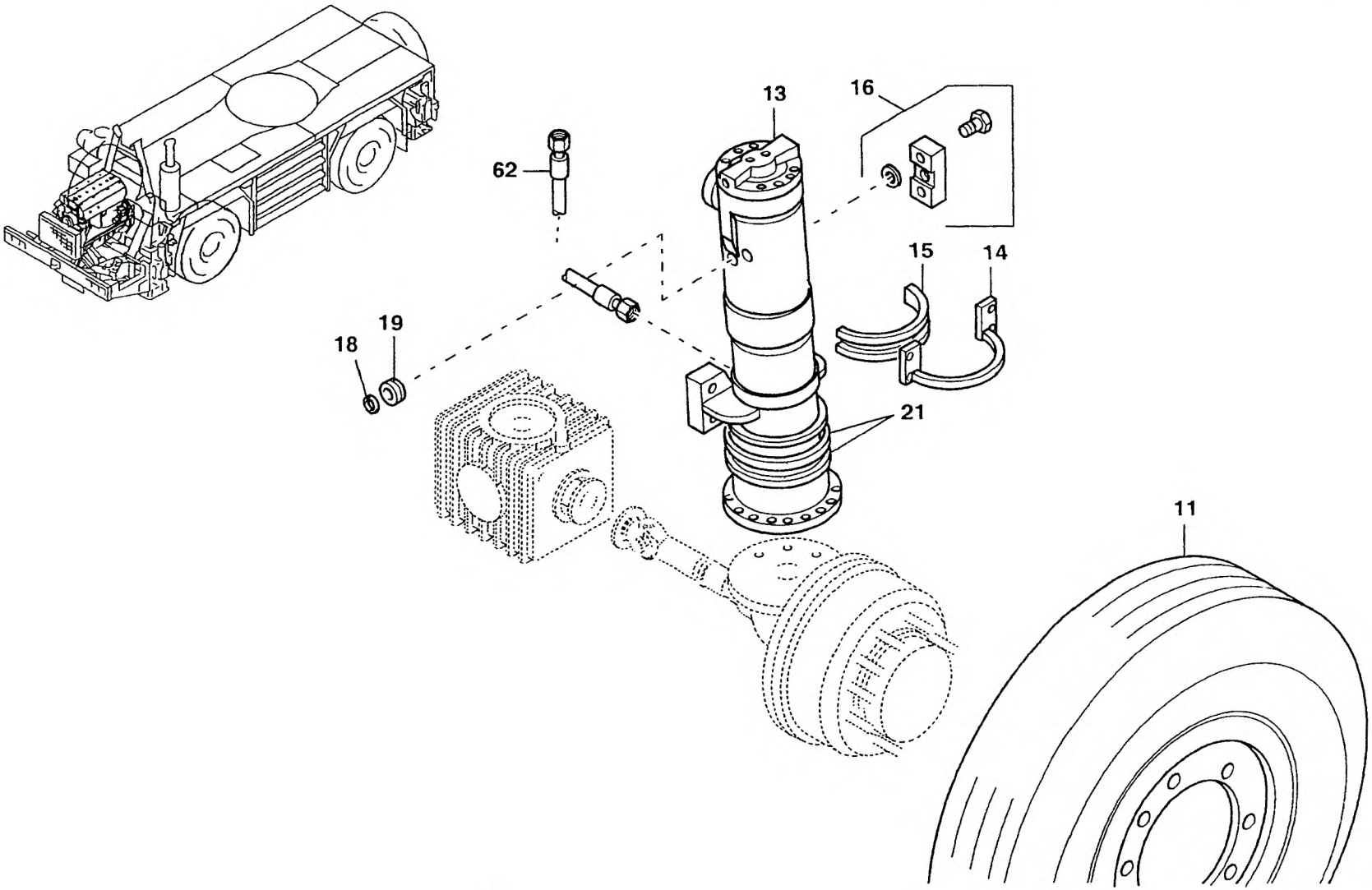

GROVE.	ACHSANBAU 4 X 4 TELMA RETARDER AXLE ATTACHMENT 4 X 4, TELMA RETARDER	BILDTAFEL PICTORIAL DISPLAY			GMK 2035 BE 511 G 061
		09.02	3056704-ETL B	3/5	

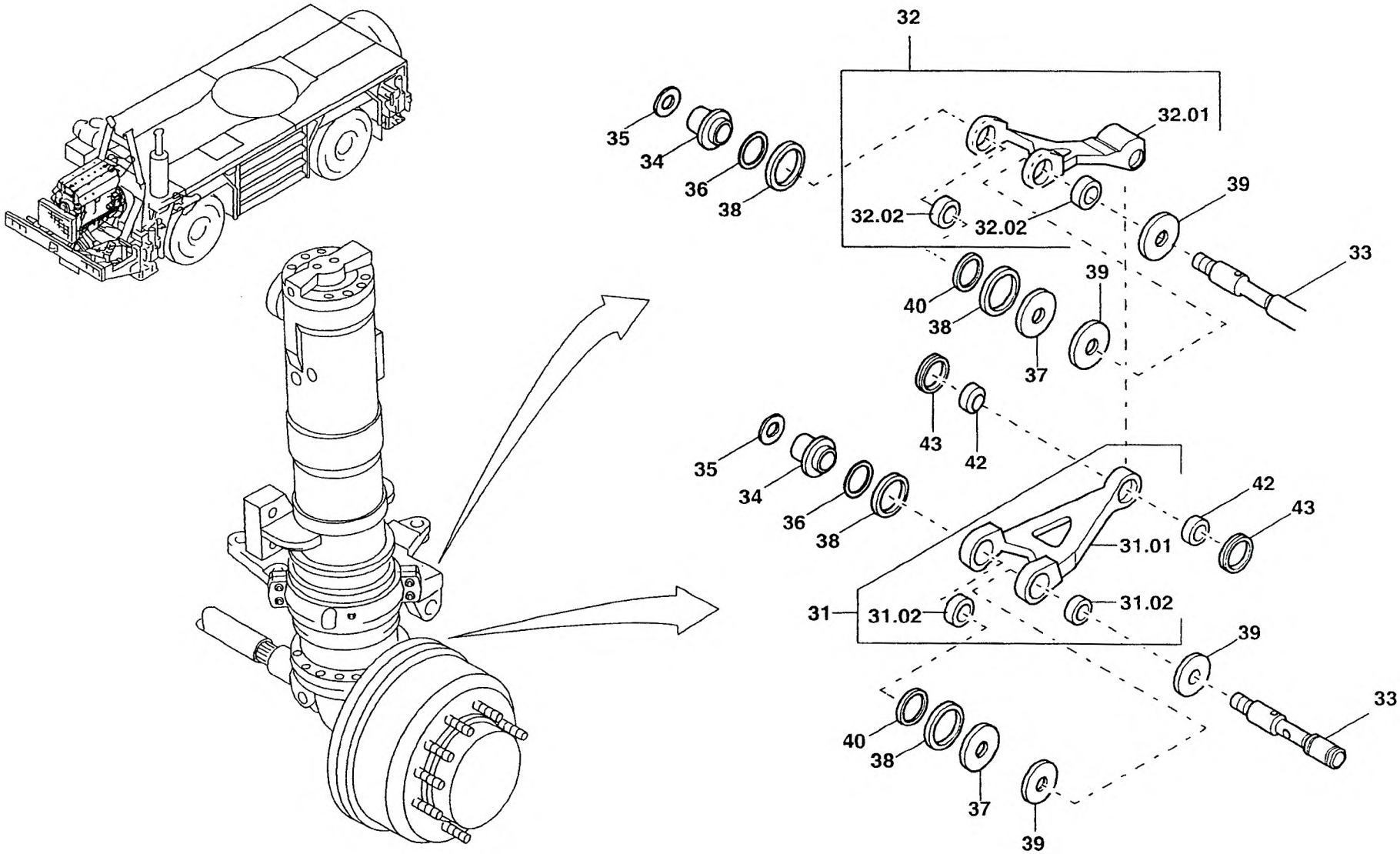

GROVE	ACHSANBAU 4 X 4 TELMA RETARDER AXLE ATTACHMENT 4 X 4, TELMA RETARDER	BILDTAFEL PICTORIAL DISPLAY			GMK 2035 BE 511 G 061
		09.02	3056704-ETL B	4/5	

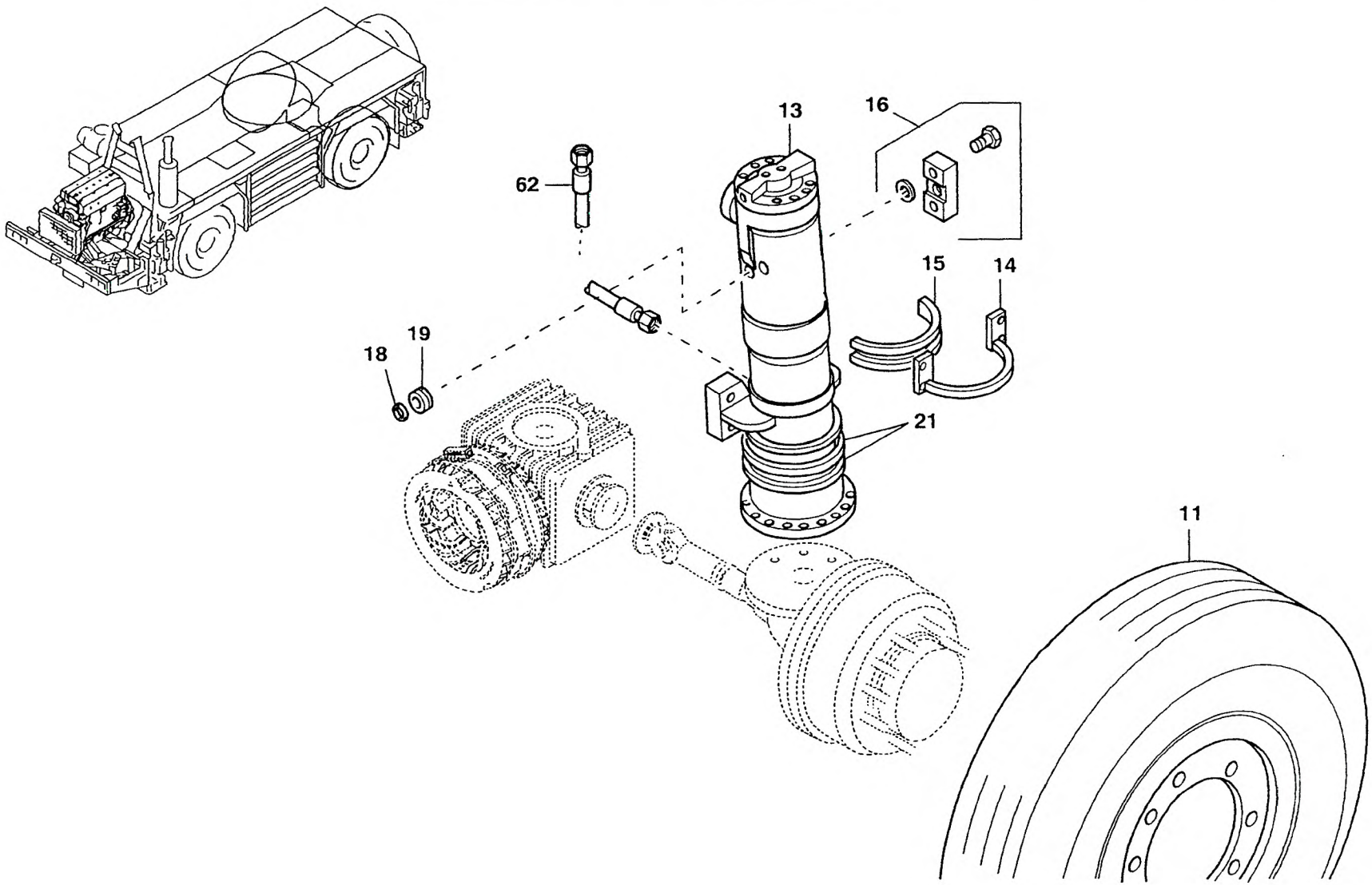
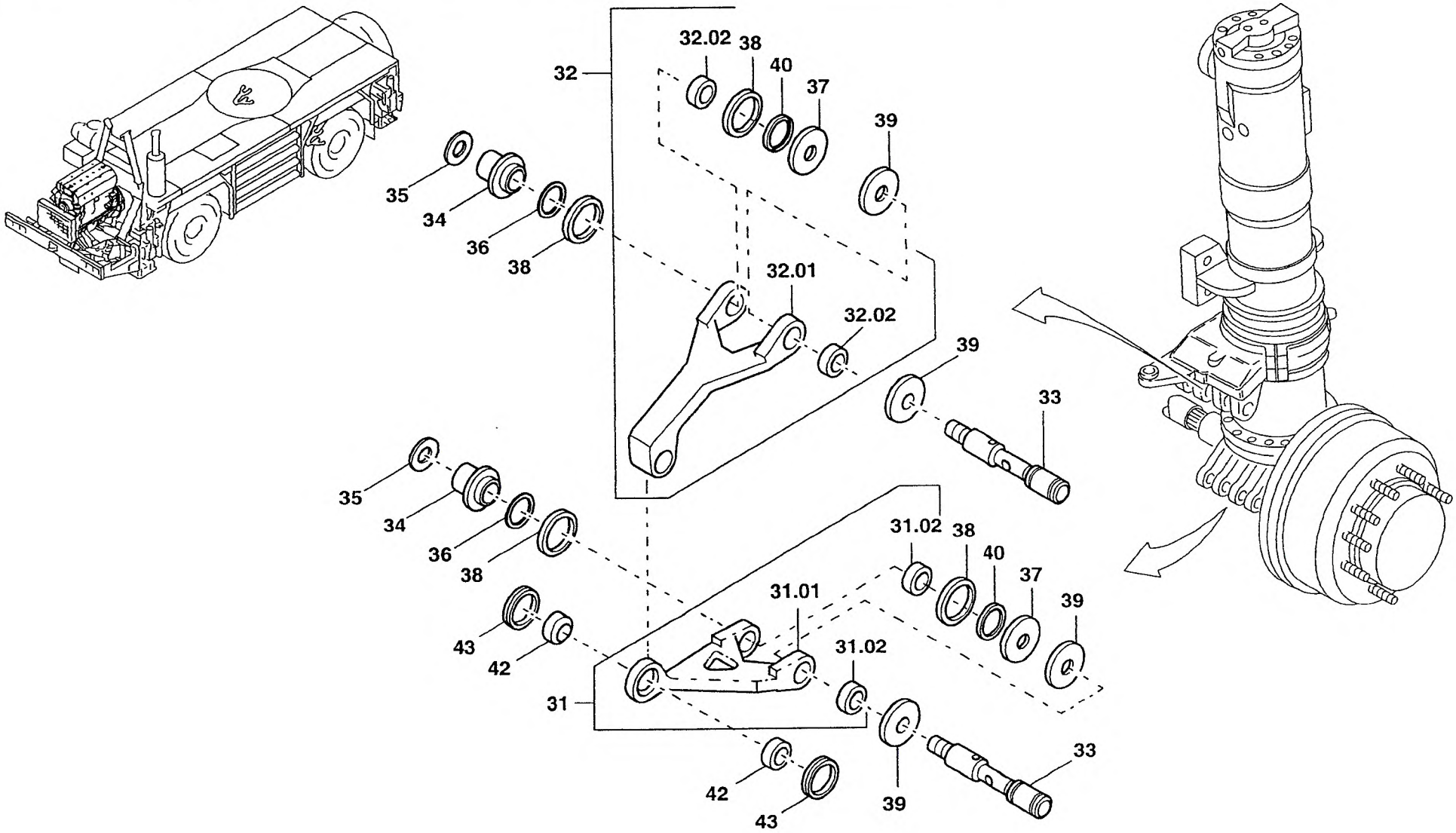
GROVE.	ACHSANBAU 4 X 4 TELMA RETARDER AXLE ATTACHMENT 4 X 4, TELMA RETARDER	BILDTAFEL PICTORIAL DISPLAY			GMK 2035 BE 511 G 061
		09.02	3056704-ETL B	5/5